# EOS USER MANUAL

SAVO®

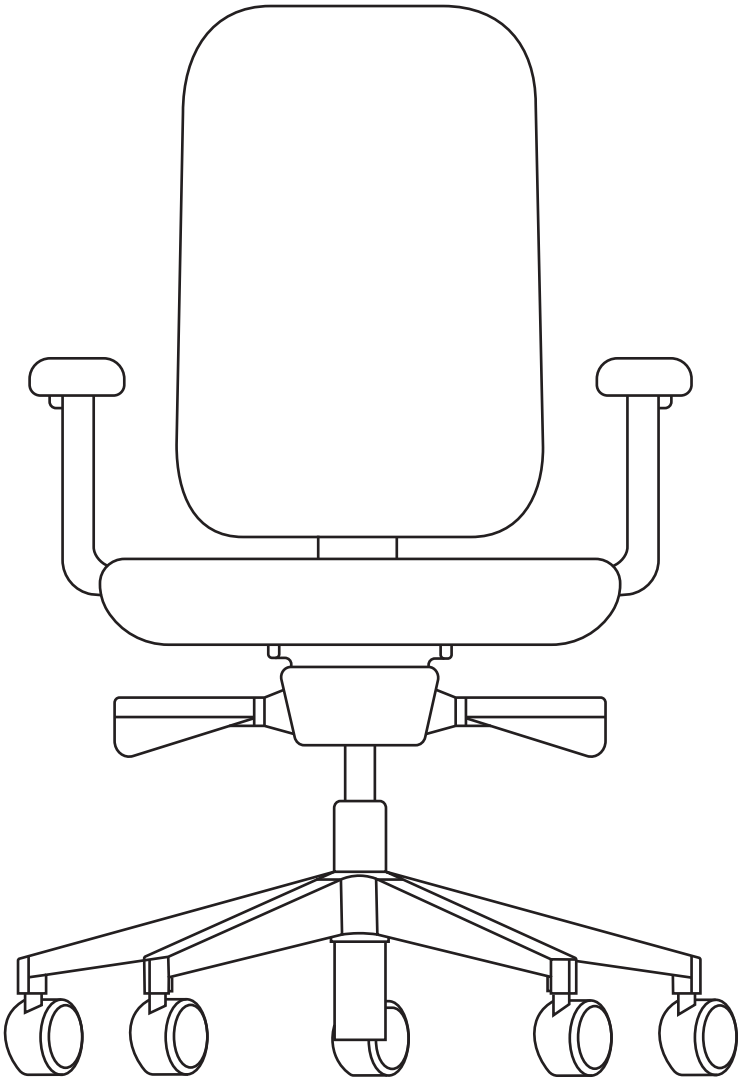

EOS USER
MANUAL

SAVO®

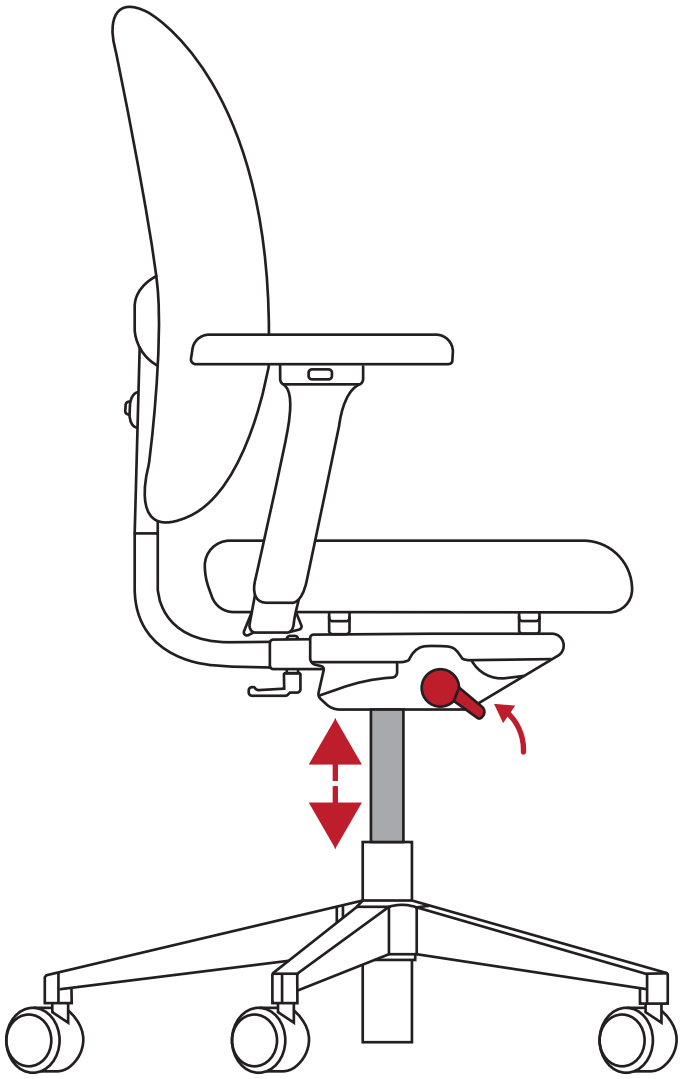

EOS USER
MANUAL

SAVO®

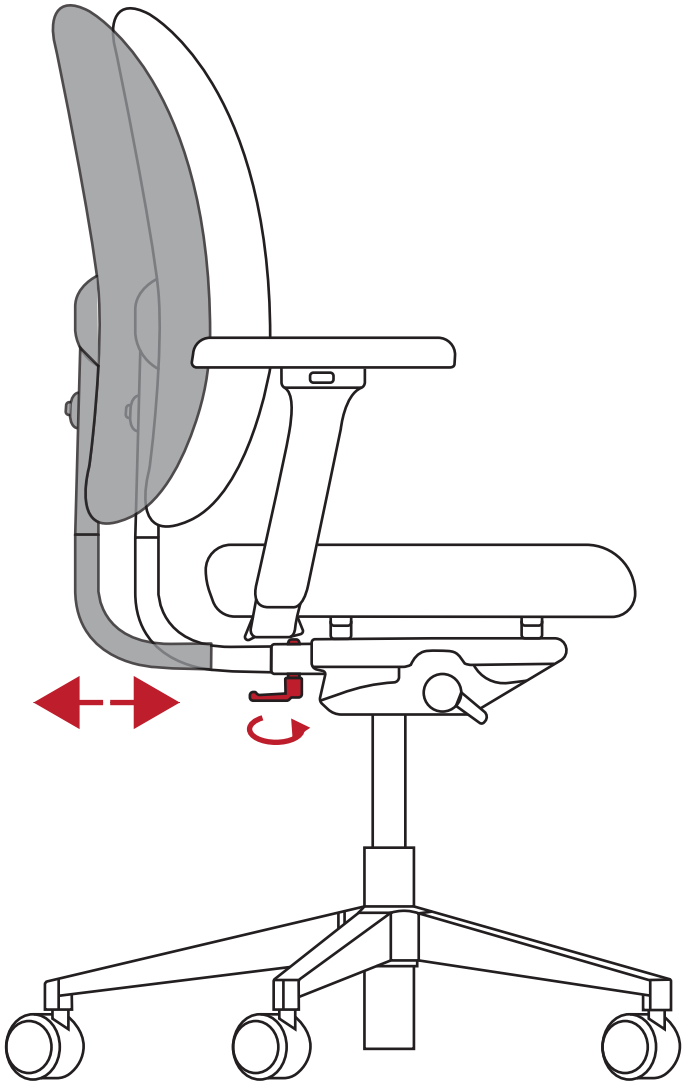

EOS USER
MANUAL

SAVO®

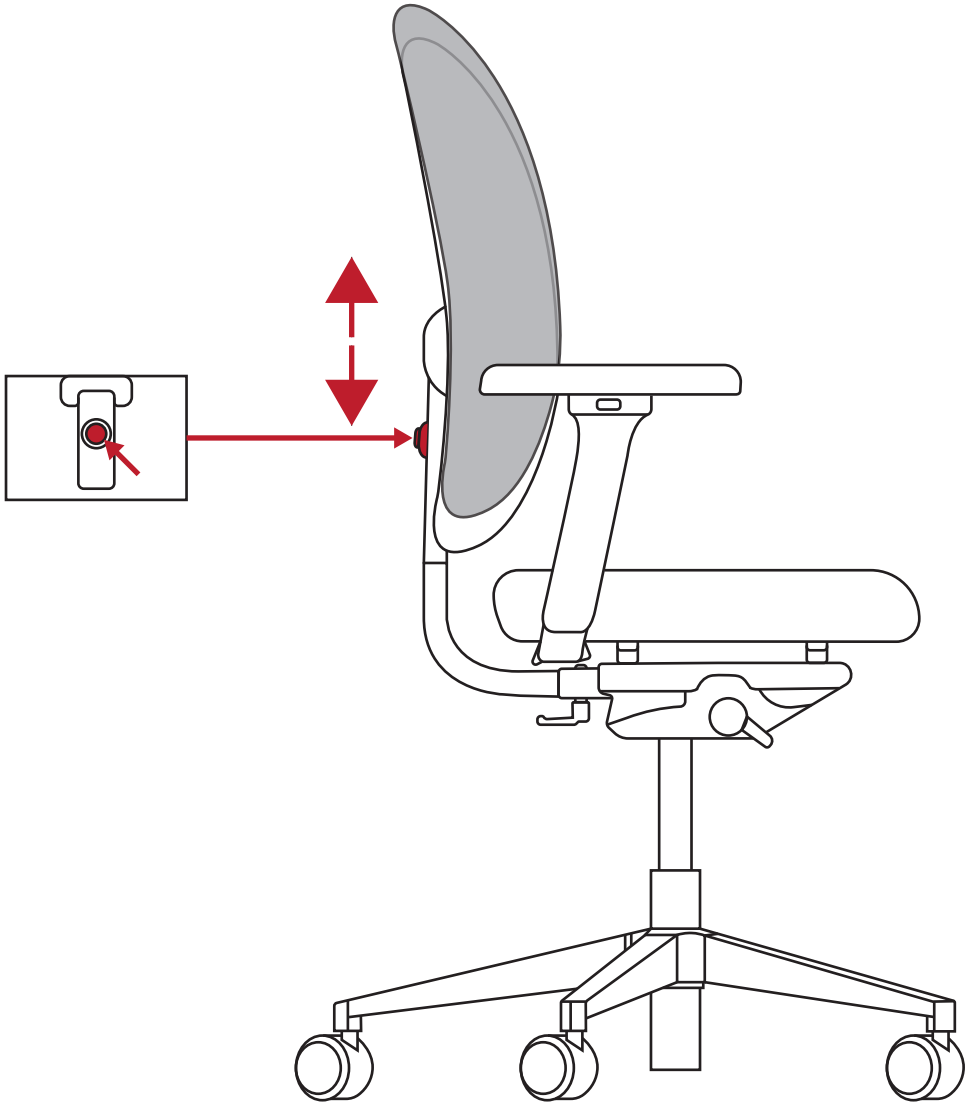

EOS USER
MANUAL

SAVO®

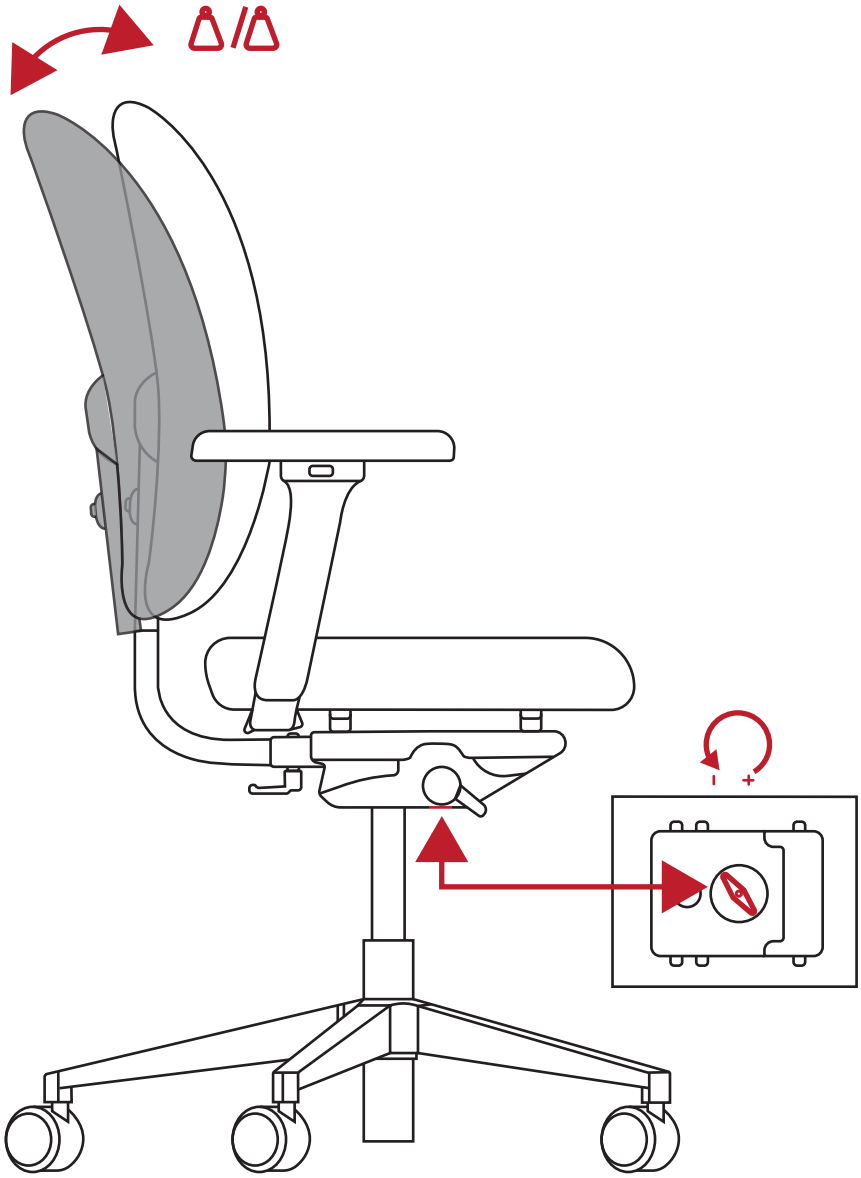

EOS USER
MANUAL

SAVO®

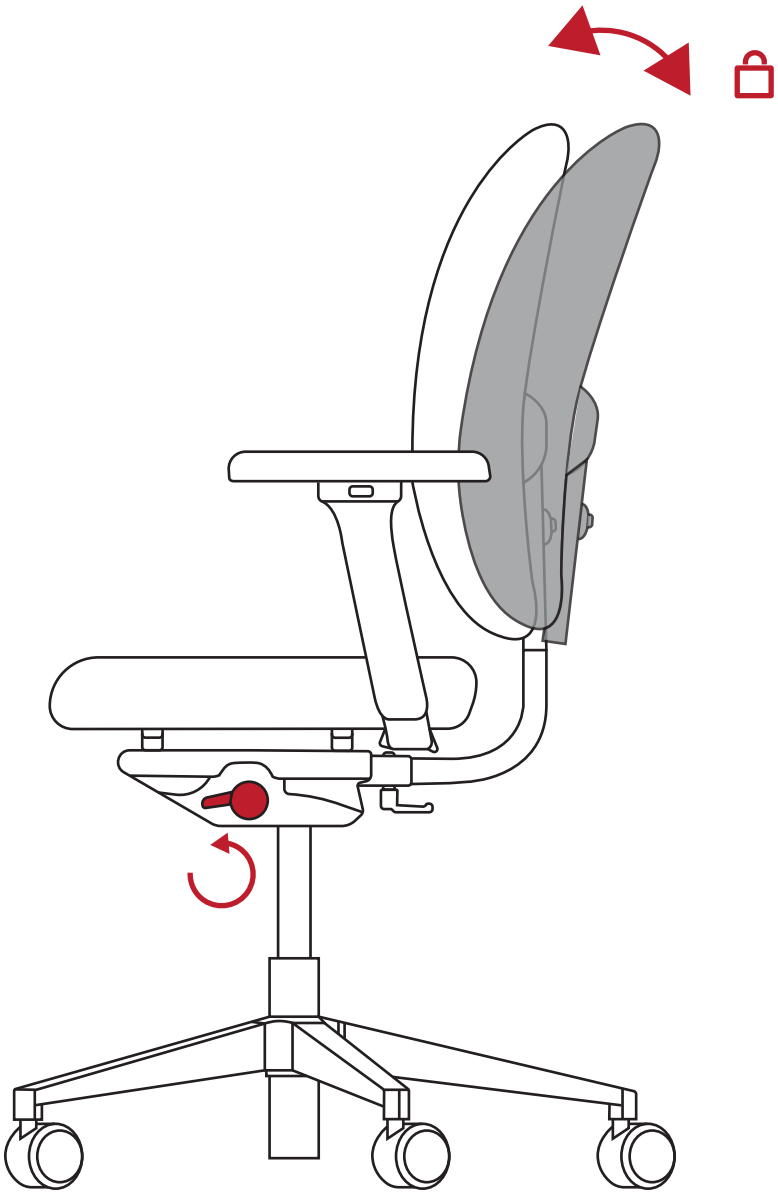

EOS USER
MANUAL

SAVO®

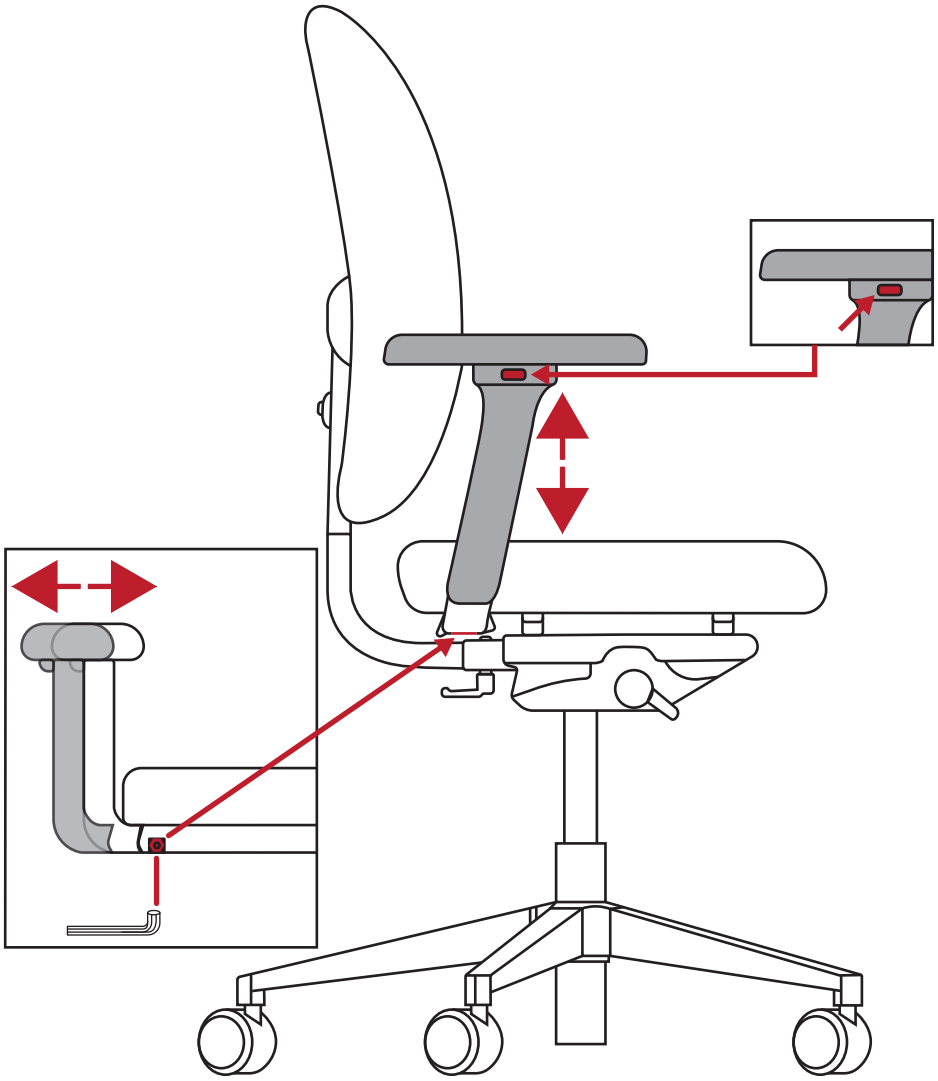

EOS USER
MANUAL

SAVO®

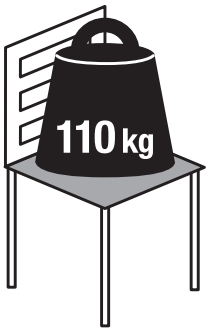


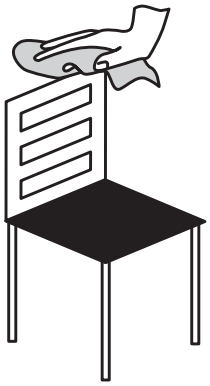

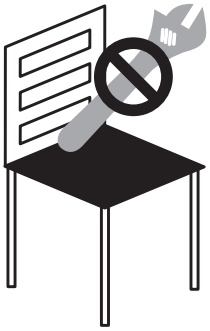

savo.com