Studio

User manual



SAVO®

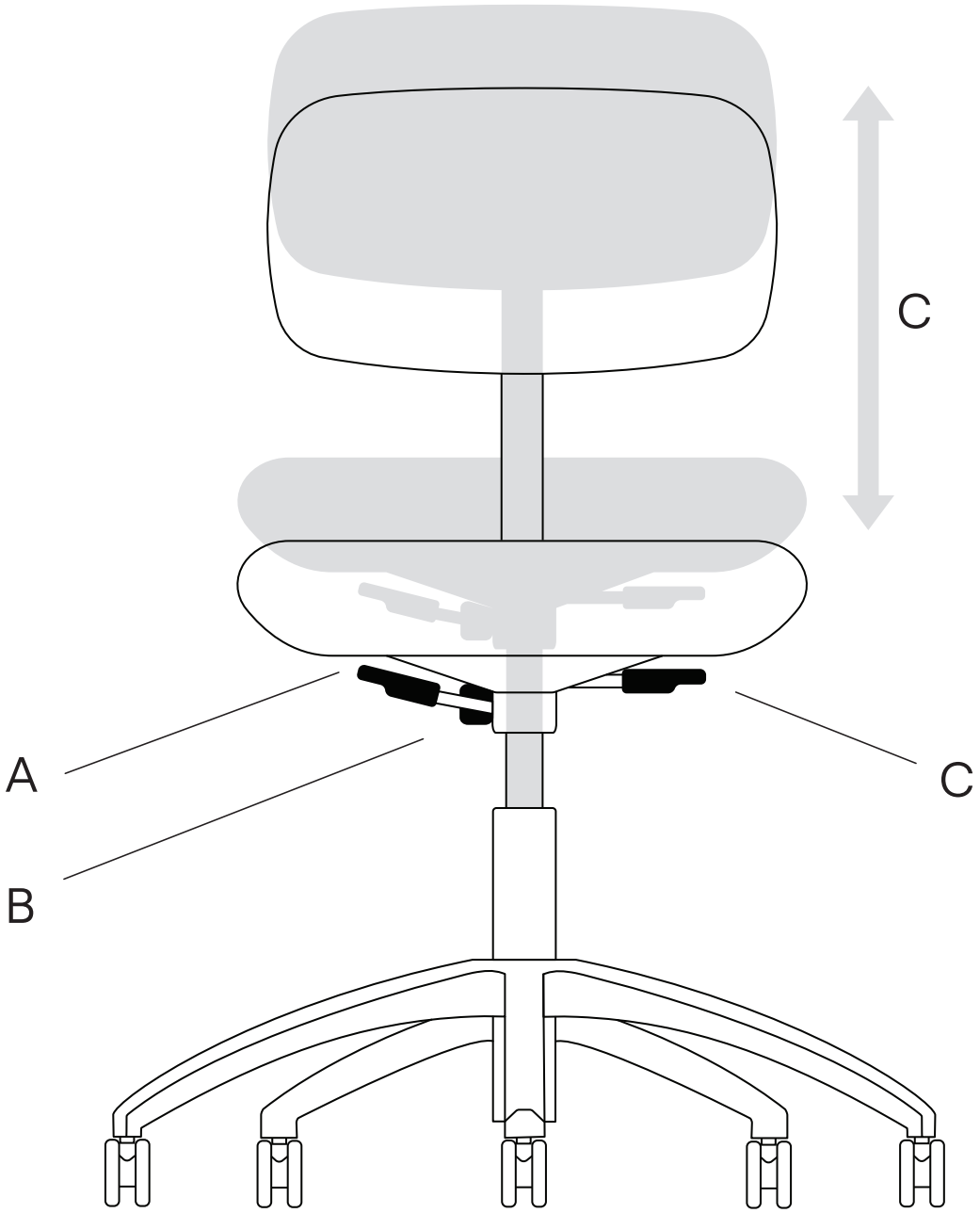
C
A
B
C

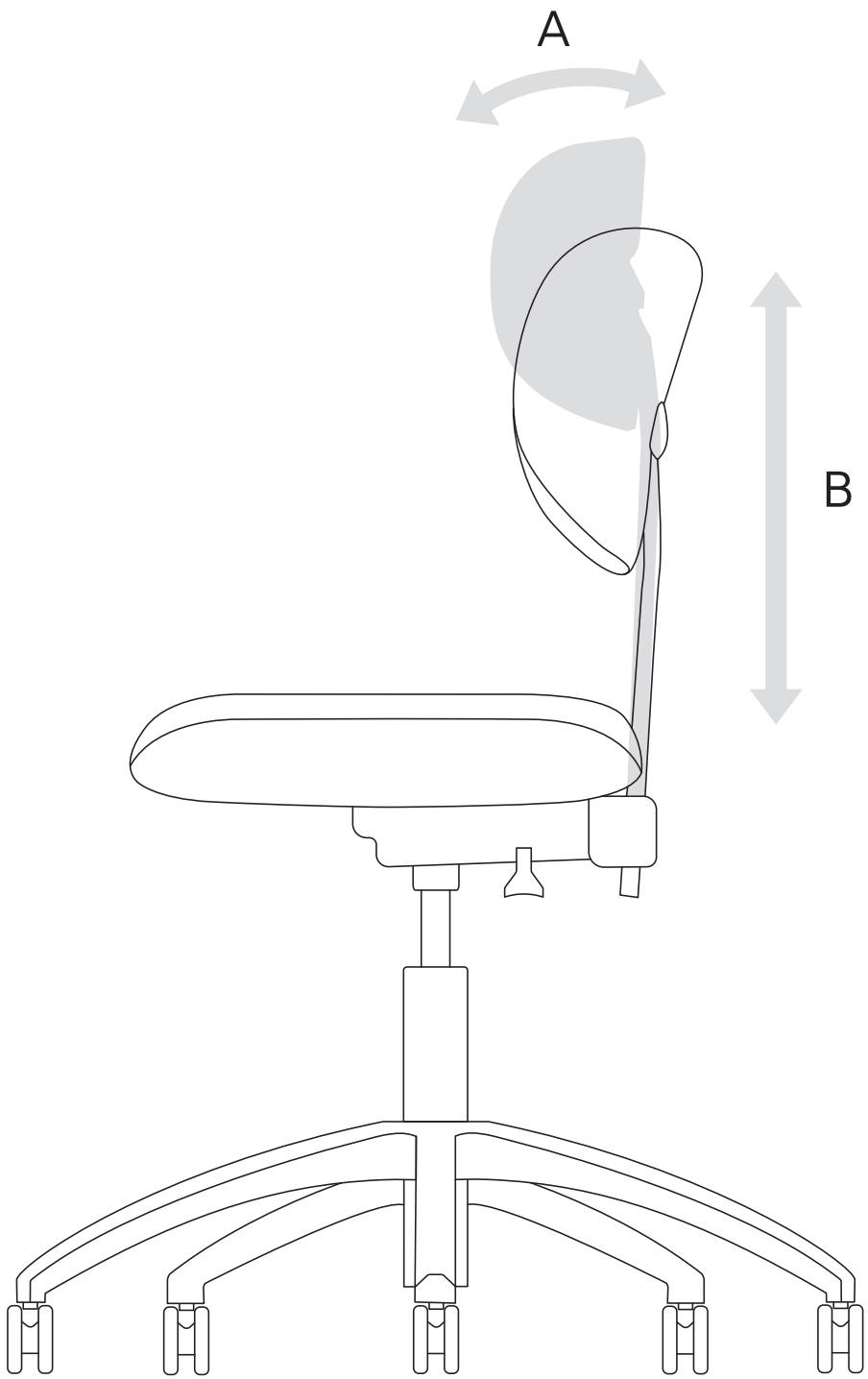
A
B

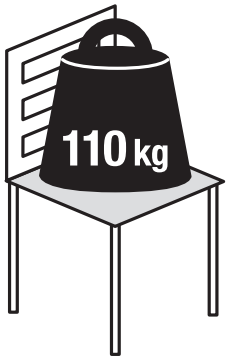

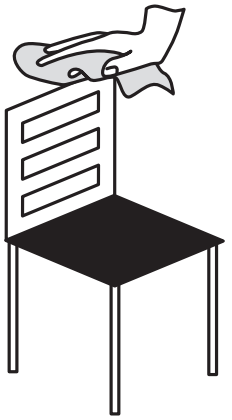





SAVO®

savo.com

2026 ©Savo. All rights reserved.