Soul
Soul Air

User manual



SAVO®

Soul
Soul Air

Designed in 2014
by Olle Lundberg

Savo Soul, designed by Olle Lundberg, shapes to every body and moves exactly as you need it to. Fully adjustable and intuitively responsive, its simple yet intelligent design includes essential adjustments with logically placed levers and controls, ensuring a customisable fit for all. A new innovation was introduced to the Soul family, further enhancing its user-centered design and freedom of movement.



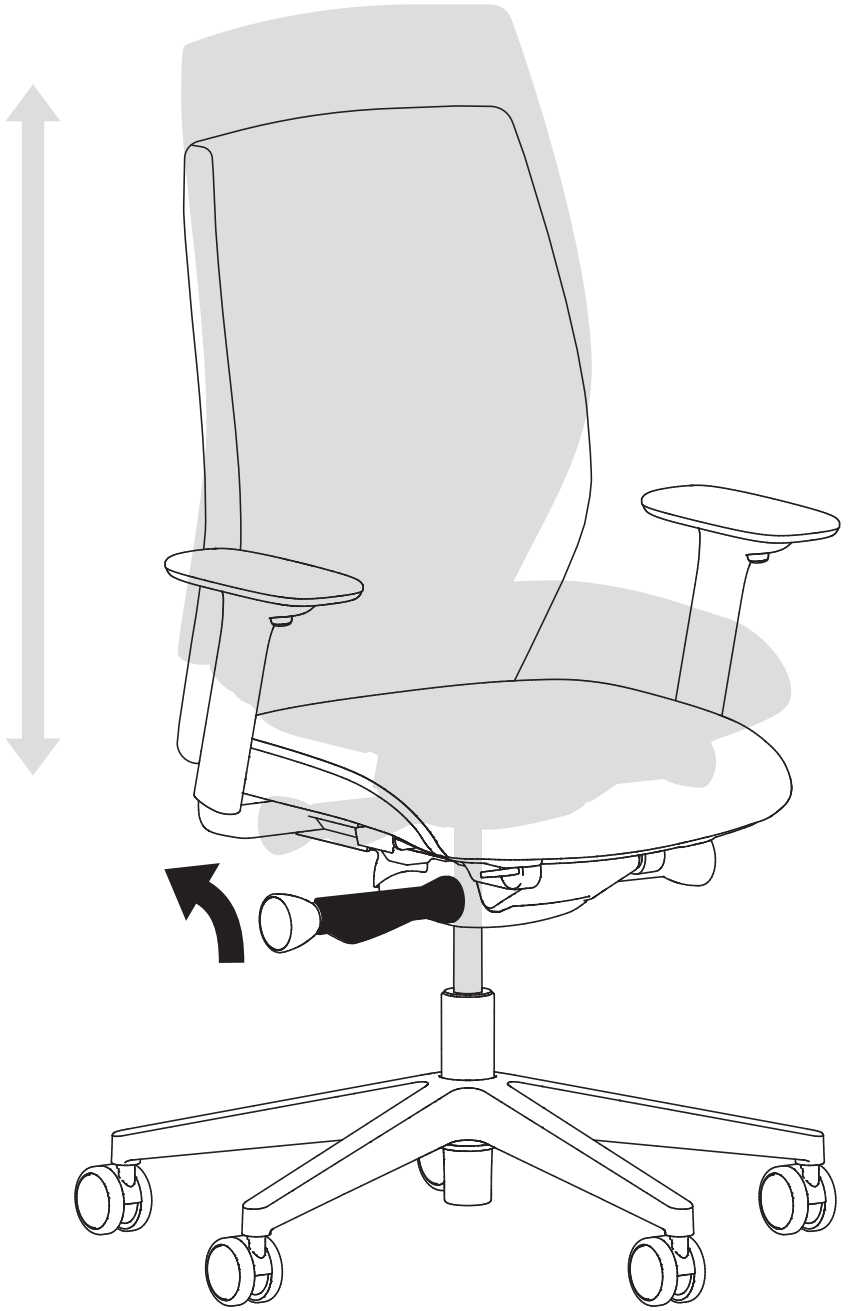

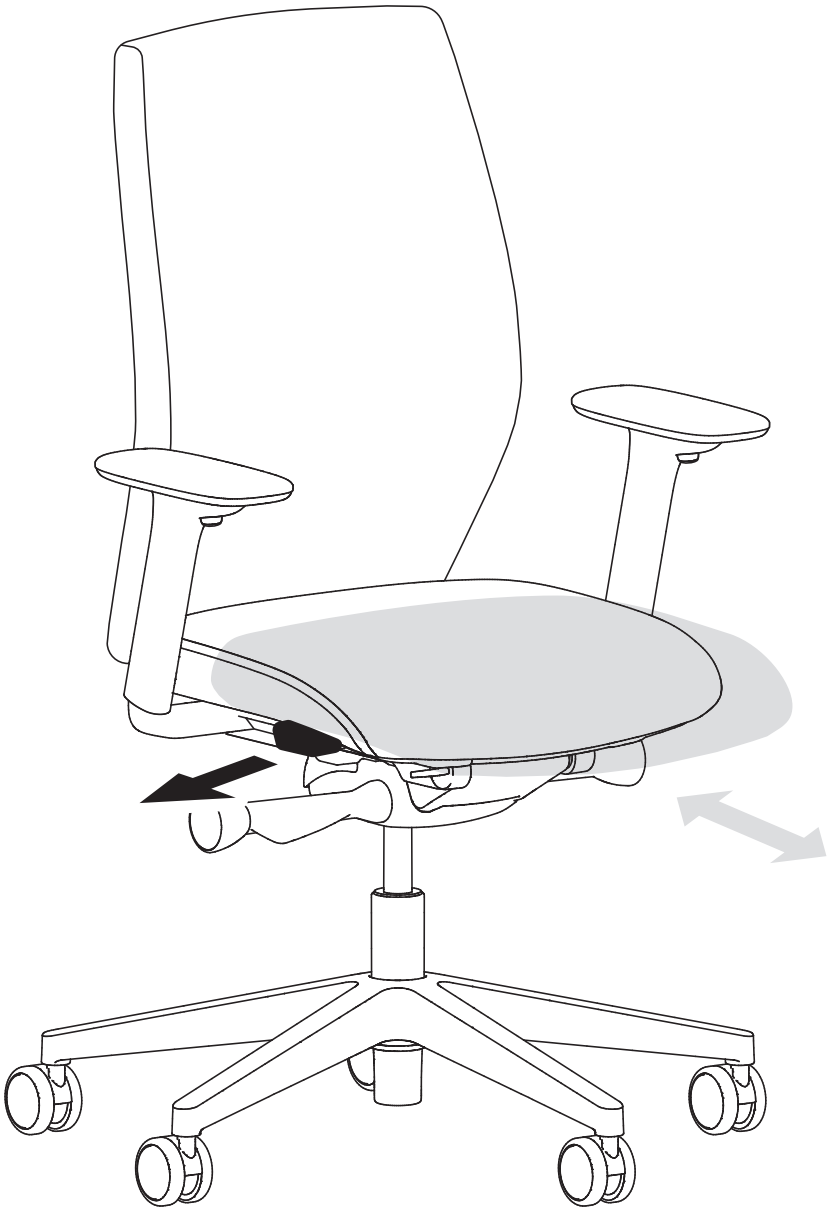



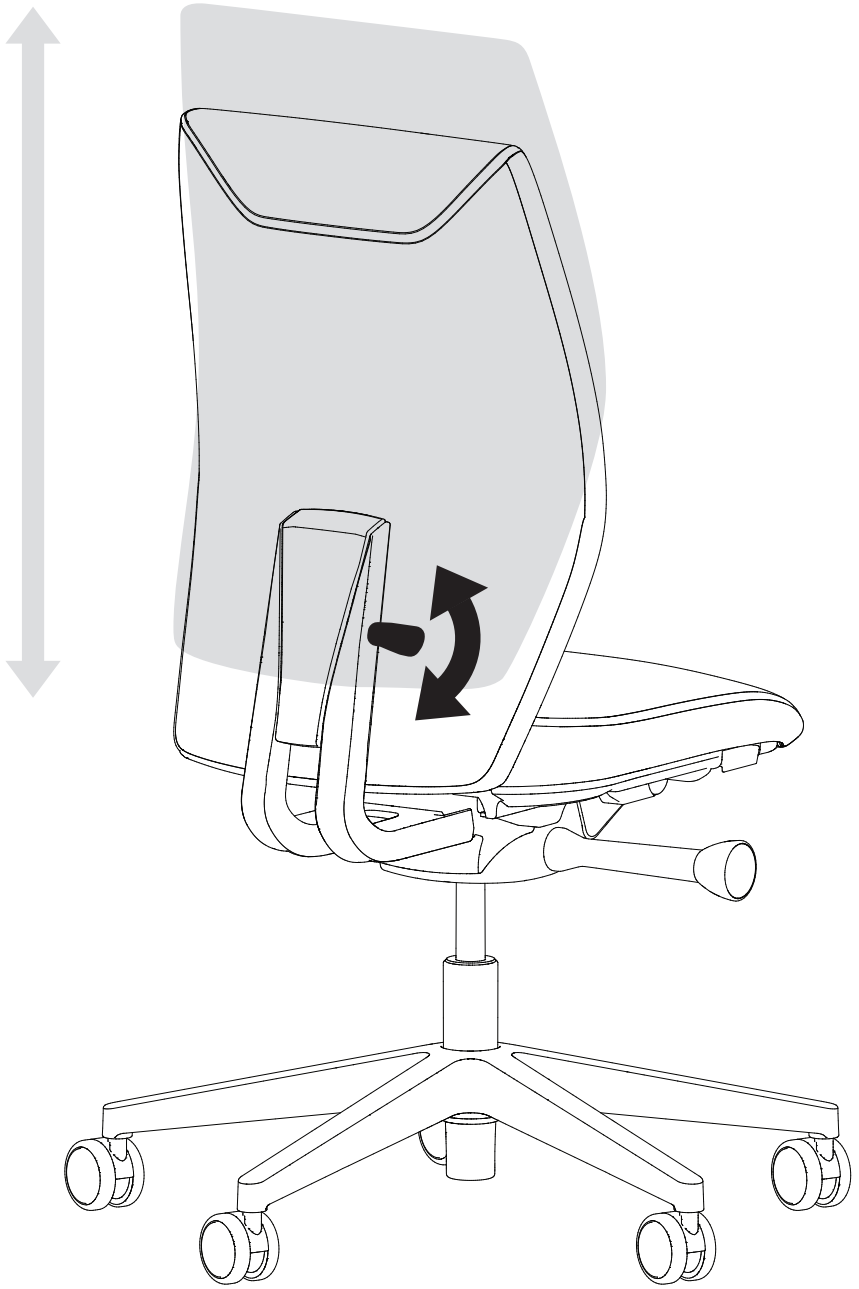

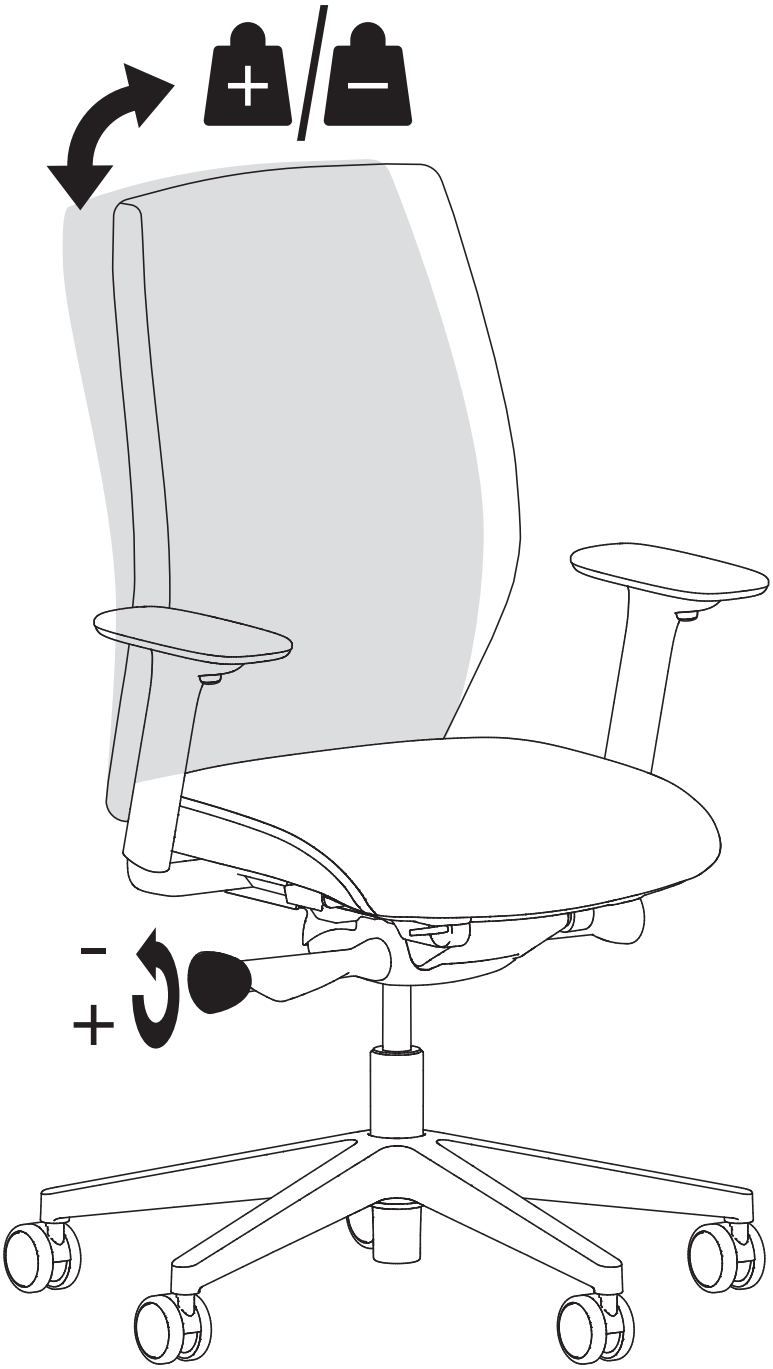



2D

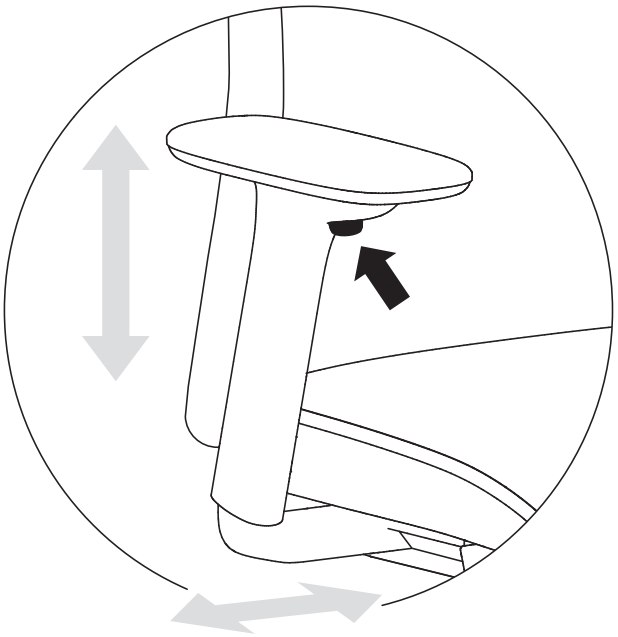

5D

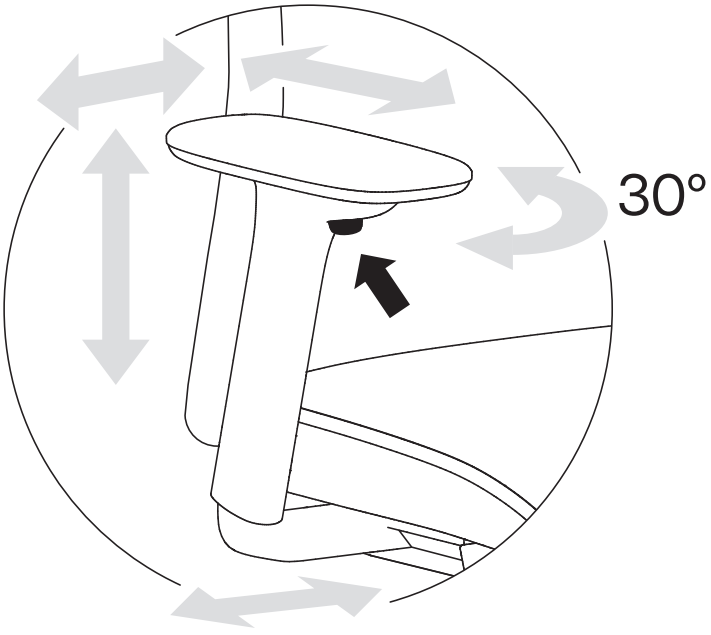

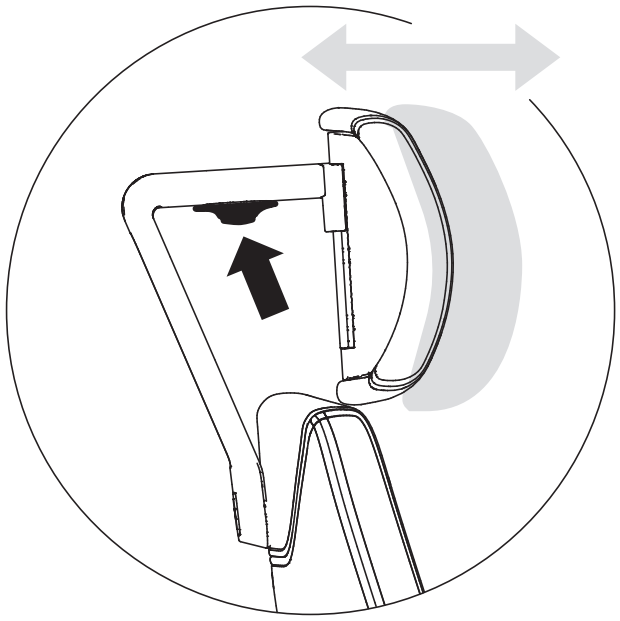

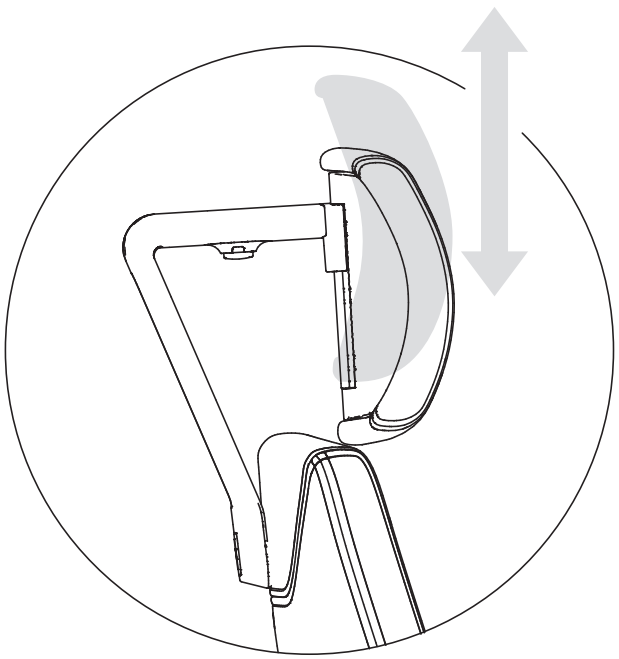

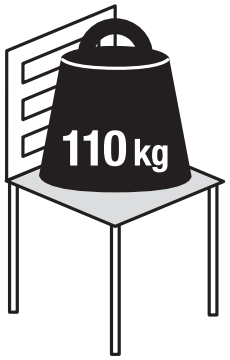

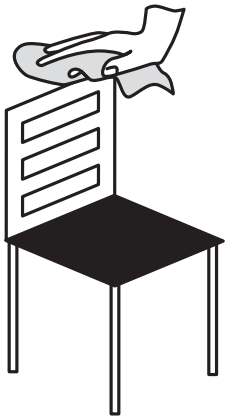





SAVO®

savo.com
2026-09 / Art no 039194

©Savo
All rights reserved.