Savo Joi

STOOL

Joi stool is an ergonomic alternative to a classic office chair. If you have discovered the benefits of a saddle chair or balance ball, you will love Joi. This minimalist office stool encourages movement and variety in your sitting. The joystick base actively stimulates sitting by balancing, and provides free movement in 360 degrees. Since no settings are needed, Joi is a flexible chair that suits many different users. It's flexibility means that it also fits well in the home office.

Foot plate with joystick funtion

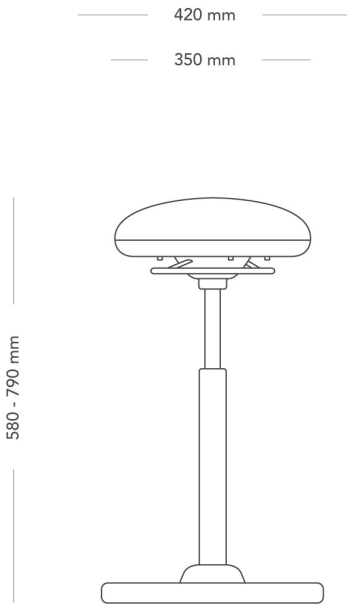

MODEL	Savo Joi workchair	
VARIANTS	– Foot plate 580 - 790 mm	– Swivel base 390 - 510 mm
	– Swivel base 490 - 630 mm	– Swivel base 590 - 800 mm
ACCESSORIES	– Foot ring Ø450 mm	
DETAILS	– Foot plate with joystick function. Alternatively swivel base with castors or gliders.	
DIMENSIONS	Width: 420 mm	Depth: 420 mm
	Seat height (with load): 580-790 mm Base diameter: 420 mm	Ø: 350 mm
WEIGHT	9 kg	
TESTED	EN 16139:2013 nivå 1, EN 1728:2012	
WARRANTY	5 years	

epd

Möbelfakta

Savo Joi

STOOL WITH SWIVEL BASE

Joi stool is an ergonomic alternative to a classic office chair. If you have discovered the benefits of a saddle chair or balance ball, you will love Joi. This minimalist office stool encourages movement and variety in your sitting. The joystick base actively stimulates sitting by balancing, and provides free movement in 360 degrees. Since no settings are needed, Joi is a flexible chair that suits many different users. It's flexibility means that it also fits well in the home office.

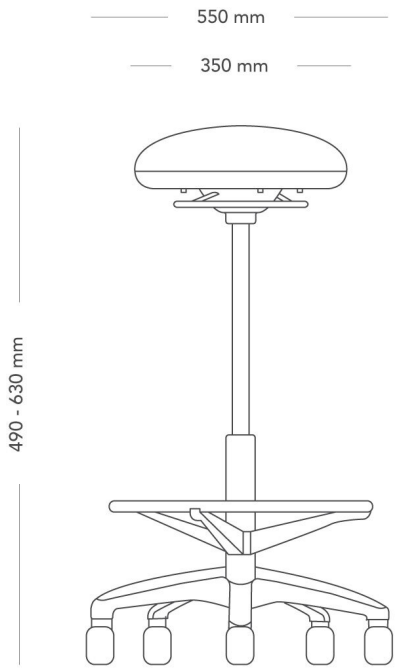

MODEL	Savo Joi workchair	
VARIANTS	– Foot plate 580 - 790 mm – Swivel base 490 - 630 mm	– Swivel base 390 - 510 mm – Swivel base 590 - 800 mm
ACCESSORIES	– Foot ring Ø450 mm	
DETAILS	– Foot plate with joystick function. Alternatively swivel base with castors or gliders.	
DIMENSIONS	Width: 550 mm Seat height (with load): 490-630 mm Base diameter: 600 mm	Depth: 550 mm Ø: 350 mm
WEIGHT	8.0 kg	
TESTED	EN 16139:2013 nivå 1, EN 1728:2012	
WARRANTY	5 years	